AirBorn

VTRAF — Right-Angle, Board-Mount Connector

VTRAF models are thermal interface connectors designed to mate with AV4M2 active optic cables and CV4M2 copper cables. VTRAF connectors are offered with multiple termination options including press-fit, paste-in-hole and plated-thru-hole options. EMI gaskets are standard with this model connector.

Sample Part Number Format: VTRAF-05-10-50-00-0-N

VTRAF – 05 – 10 – 50 – [ ] – [ ] – [ ]

Series
VTRAF – Vertical Thermal Right-Angle Female

Rows
05 – 5 Rows

Columns
10 – 10 Columns

Contact Plating
50 – 50µIN Au

Termination
00 – Press-Fit
01 – Paste-In-Hole (PIH)
02 – Plated-Thru-Hole (PTH) .078" Length
03 – PTH .109" Length
04 – PTH .140" Length
05 – PTH .156" Length
06 – PTH .172" Length

Keying Polarization*
00 – Option 'A' - Standard
01 – Option 'B'
02 – Option 'C'
03 – Option 'D'
04 – Option 'E'
05 – Option 'F'
06 – Option 'G'
07 – Option 'H'
*See pages 36-43 for keying details and dimensions

Hardware Options
N – Fixed Jacknut
NE – Fixed Jacknut With Panel Mount

Notes:
- Mates with cable series: AV4MX-XXX-XXX-XXXX-XXX & CV4MX-XXX-XXXX-X
- Packaging: parts supplied in thermoformed trays, hardware supplied uninstalled
- See AirBorn spec ESL5001 for additional application information

NOTE: Please consult airborn.com to configure your part number and for the latest revision controlled drawing and technical data.

Marking Detail

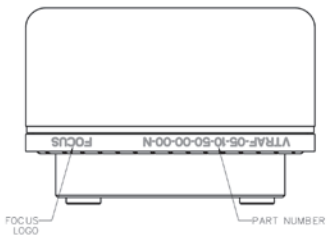

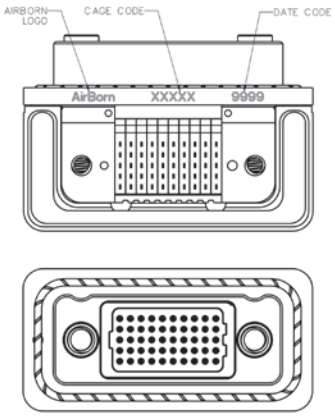

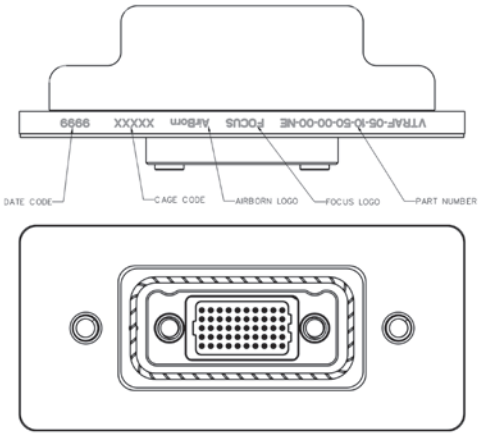

Dimensions

Panel Mount Option

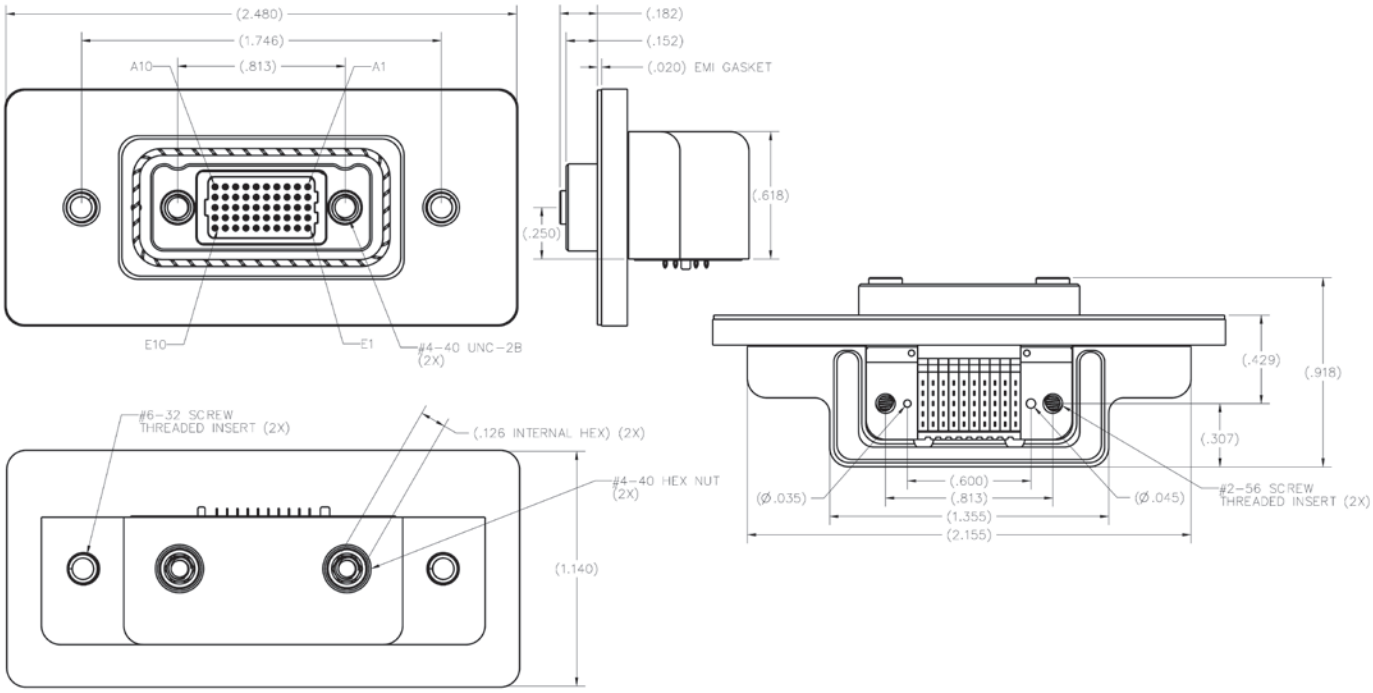

Board Mount Option

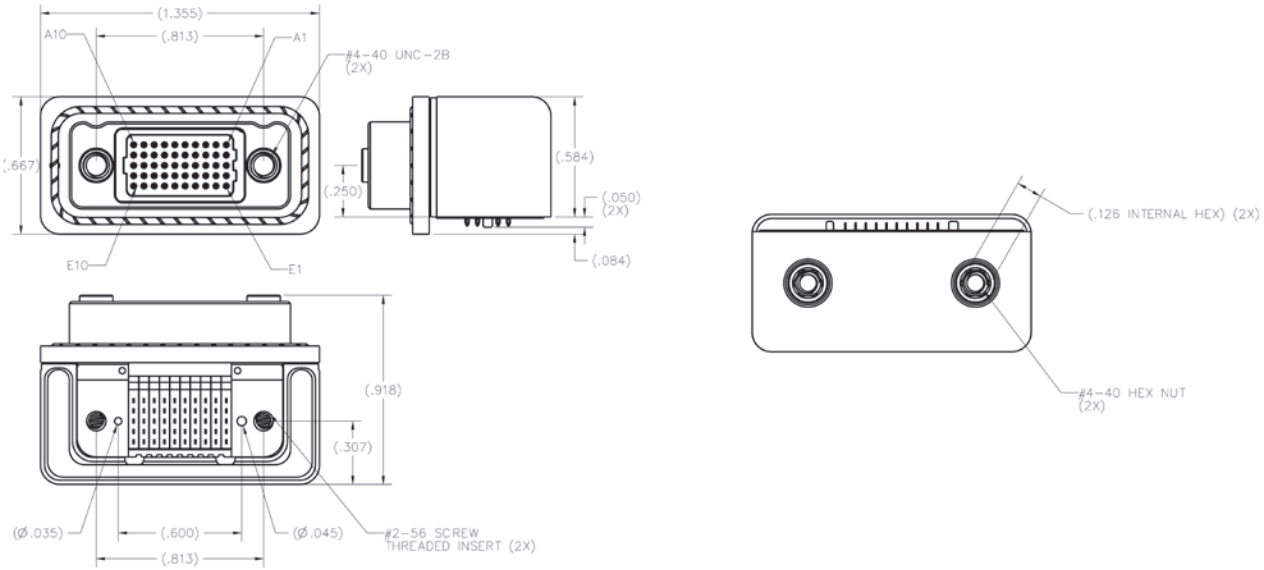

Please consult the AirBorn website for the latest revision of this document prior to beginning any design work.

AirBorn

VTRAF Materials, Finishes, & Performance

Materials & Finishes

Socket Contacts	Material	BeCu per ASTM B194
	Finish Socket End	50µin min localized Au per ASTM B488 type II, code C, over 50µin min Ni per ASTM B689 Type I
	Finish Termination End	PIH & PTH: 10µin min localized Au flash per ASTM B488 Type I, code A or C over 50µin min ni per ASTM B689 Type I Press-fit: 50µin min localized Au per ASTM B488 Type II, code C over 50µin min Ni per ASTM B689 Type I
Molded Insulators	Material	Glass-filled liquid crystal polymer (LCP) per ASTM D5138
Shell	Material	Aluminum alloy 6061-T6 per SAE AMS-4027 or 6051-t6511 Per SAE AMS-QQ-A-200/8
	Finish	500µin min electroless Ni per SAE AMS-2404, class 3
Embedment	Material	Frey Eng. Co. Insulating compound CF3003-80 or equivalent
Hardware	Material	Stainless steel per ASTM A484/A484m, ASTM A582/A582m, or ASTM A320
	Finish	Passivated per SAE MAS-2700
Washers	Material	Stainless steel per SAE NASM35333 (ASTM A240)
	Finish	Passivate per NASM35333 (SAE AMS-2700)
EMI Spira Gasket	Material	Beryllium copper
	Finish	Electroplated, 90% tin, 10% lead per AMS-P-81728
Thread Insert	Material	NAS1130-02-10
Thermal Electrical Gasket	Material	Silver-Copper filled silicon, acrylic, electrically conductive, pressure sensitive adhesive (PSA) backing

Performance

Contact Rating 2	2 Amperes max, see AirBorn PTB66 for more info
Operating Temperature	-55°C to 125°C, see AirBorn PTB66 for more info
Contact Engagement Force	6.0oz max*
Contact Separation Force	0.5oz min*
Connector Mating Force	10oz X (# of contacts) max tested per MIL-DTL-83513
Connector Unmating Force	10oz X (# of contacts) max tested per MIL-DTL-83513
DWV (Sea Level)	600V, RMS, 60Hz, see AirBorn PTB61 for more info
Recommended Maximum Operating Voltage	200V, RMS, 60Hz, see AirBorn PTB61 for more info
Insulation Resistance	5,000 MEGAOHMS minimum @ 500 VDC, tested per MIL-DTL-83513
Durability	10,000 connector mating cycles, exceeds MIL-DTL-83513
Sinusoidal Vibration	20g, tested per MIL-DTL-83513
Shock	50g, tested per MIL-DTL-83513
Outgassing	Max TML of 1% and max CVCM of .1% per MIL-DTL-83513

*Max pin size used for contact engagement force and min pin size used for contact separation force.

Please consult the AirBorn website for the latest revision of this document prior to beginning any design work.