AirBorn

3 · ROW
PC Card to Board or Chassis

.100"

WGA - WGA
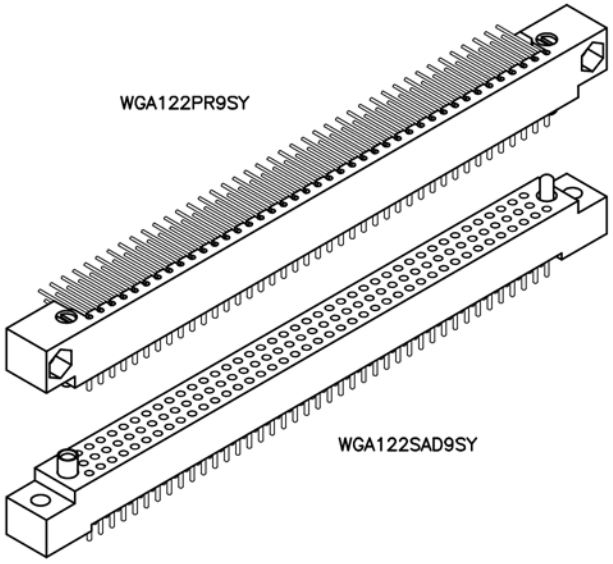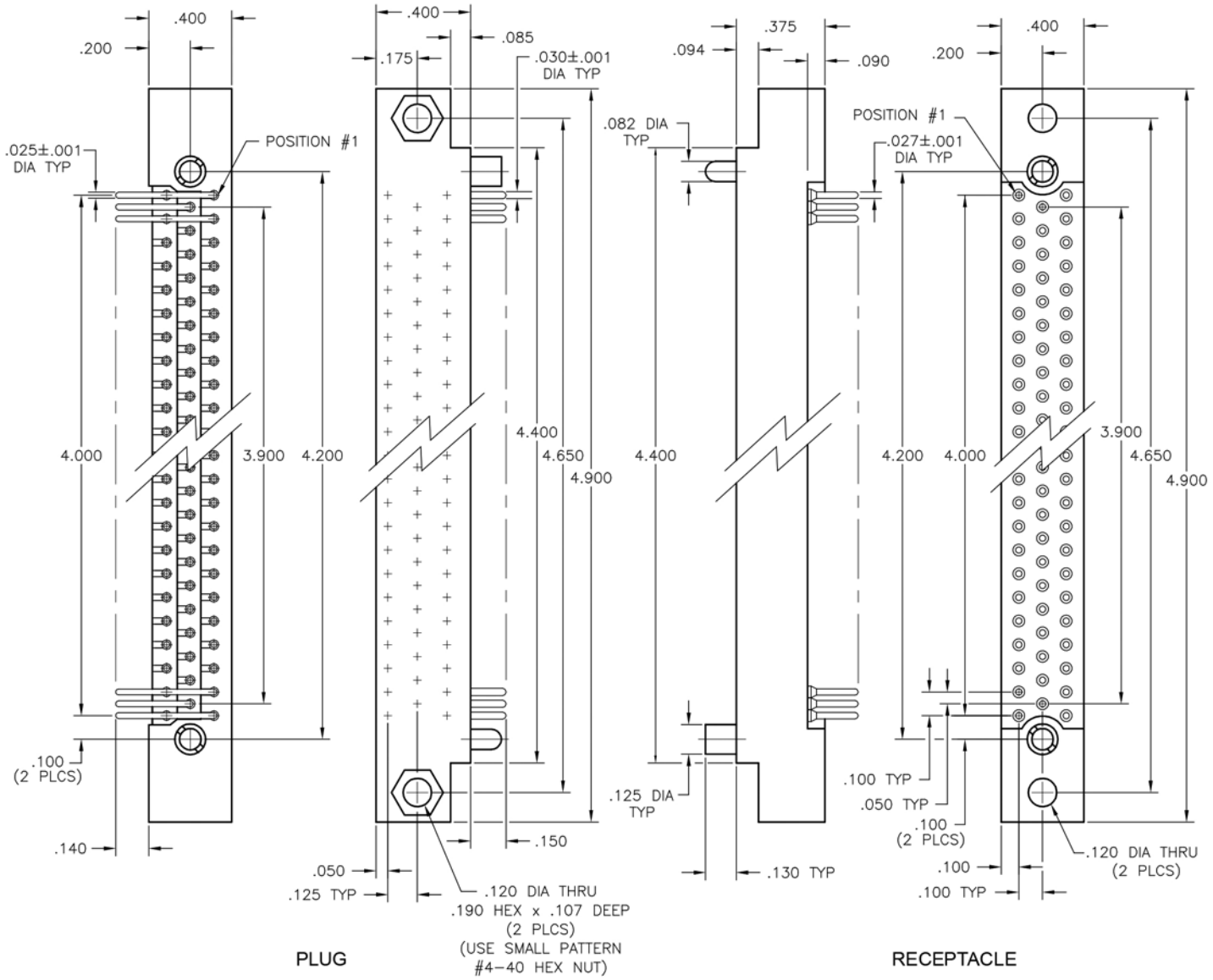
122 Contacts