FOUR ROW – PRESS-FIT STACKABLE CABLE MATE

RC4
0.075" I 28 THROUGH 152 CONTACTS

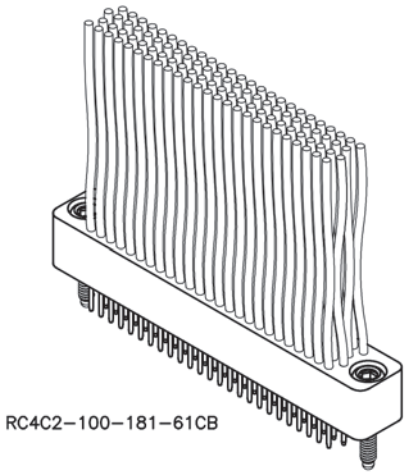

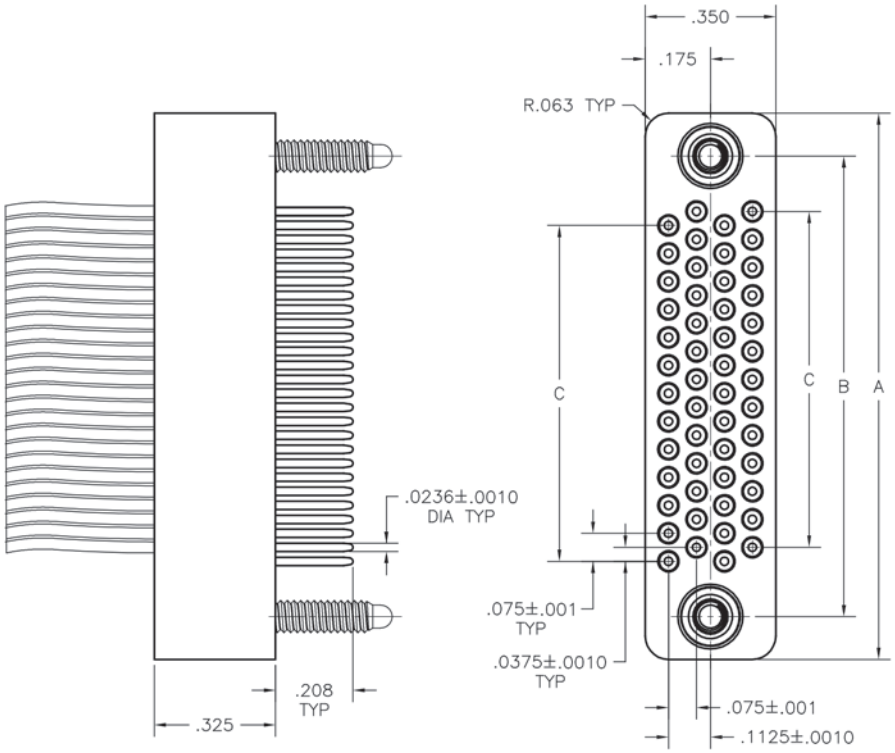

DIMENSIONS			
SIZE	A	B	C
28	1.014	.784	.450
52	1.464	1.234	.900
76	1.914	1.684	1.350
100	2.364	2.134	1.800
128	2.889	2.659	2.325
152	3.339	3.109	2.775

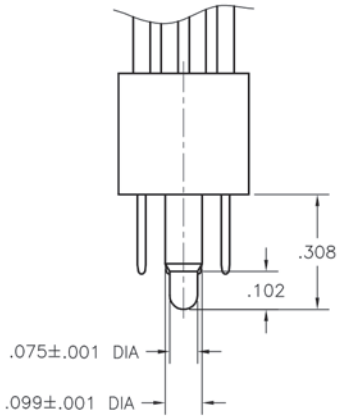

HARDWARE STYLE
57

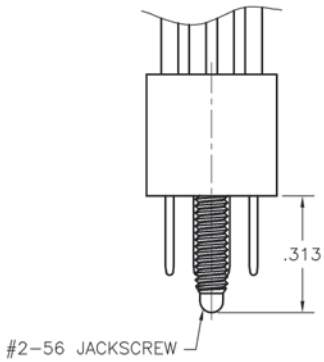

HARDWARE STYLE
61