# SIX ROW – DAUGHTERBOARD-TO-MOTHERBOARD OR CHASSIS

**RM6**
0.075" I 448 THROUGH 604 CONTACTS

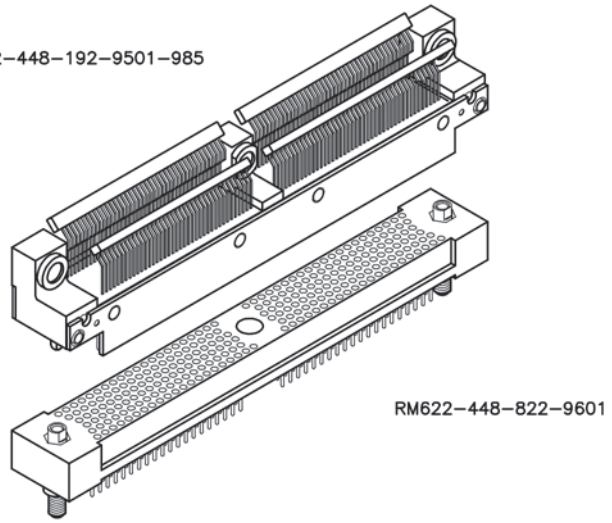


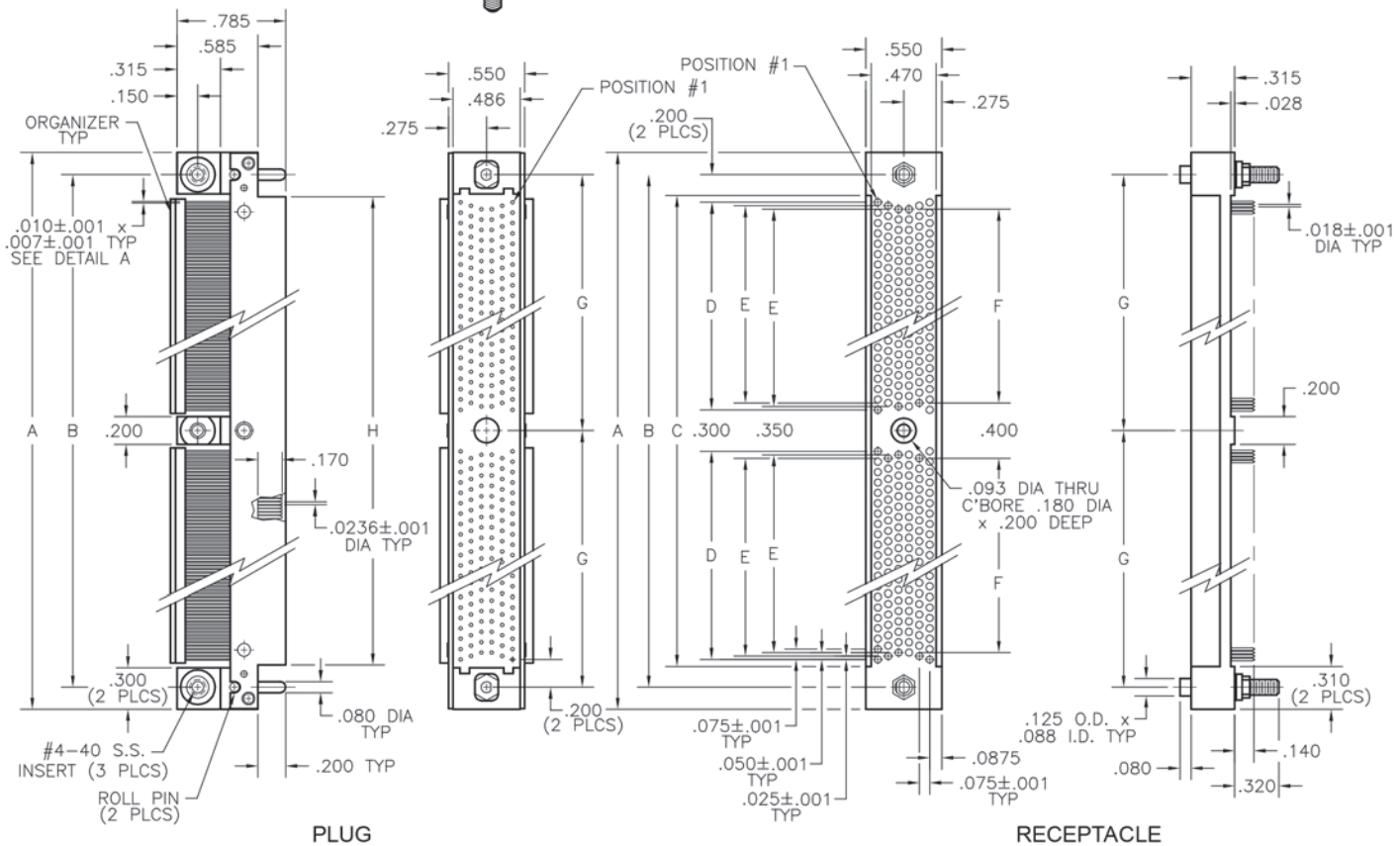


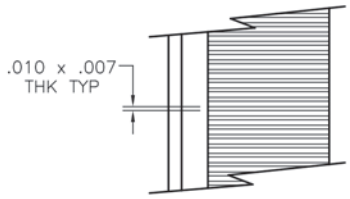


DETAIL A

| DIMENSIONS | | | | | | | | |
|---|---|---|---|---|---|---|---|---|
| SIZE | A | B | C | D | E | F | G | H |
| 448 | 6.570 | 6.250 | 5.950 | 2.775 | 2.700 | 2.675 | 3.125 | 5.930 |
| 604 | 8.520 | 8.200 | 7.900 | 3.750 | 3.675 | 3.650 | 4.100 | 7.880 |