# SIX ROW – MOTHERBOARD- OR CHASSIS-TO-DAUGHTERBOARD

**RM6**
0.075" I 162 THROUGH 402 CONTACTS

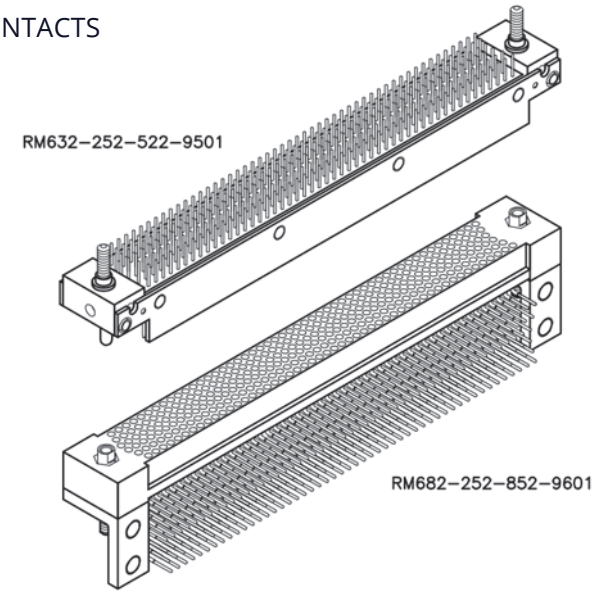


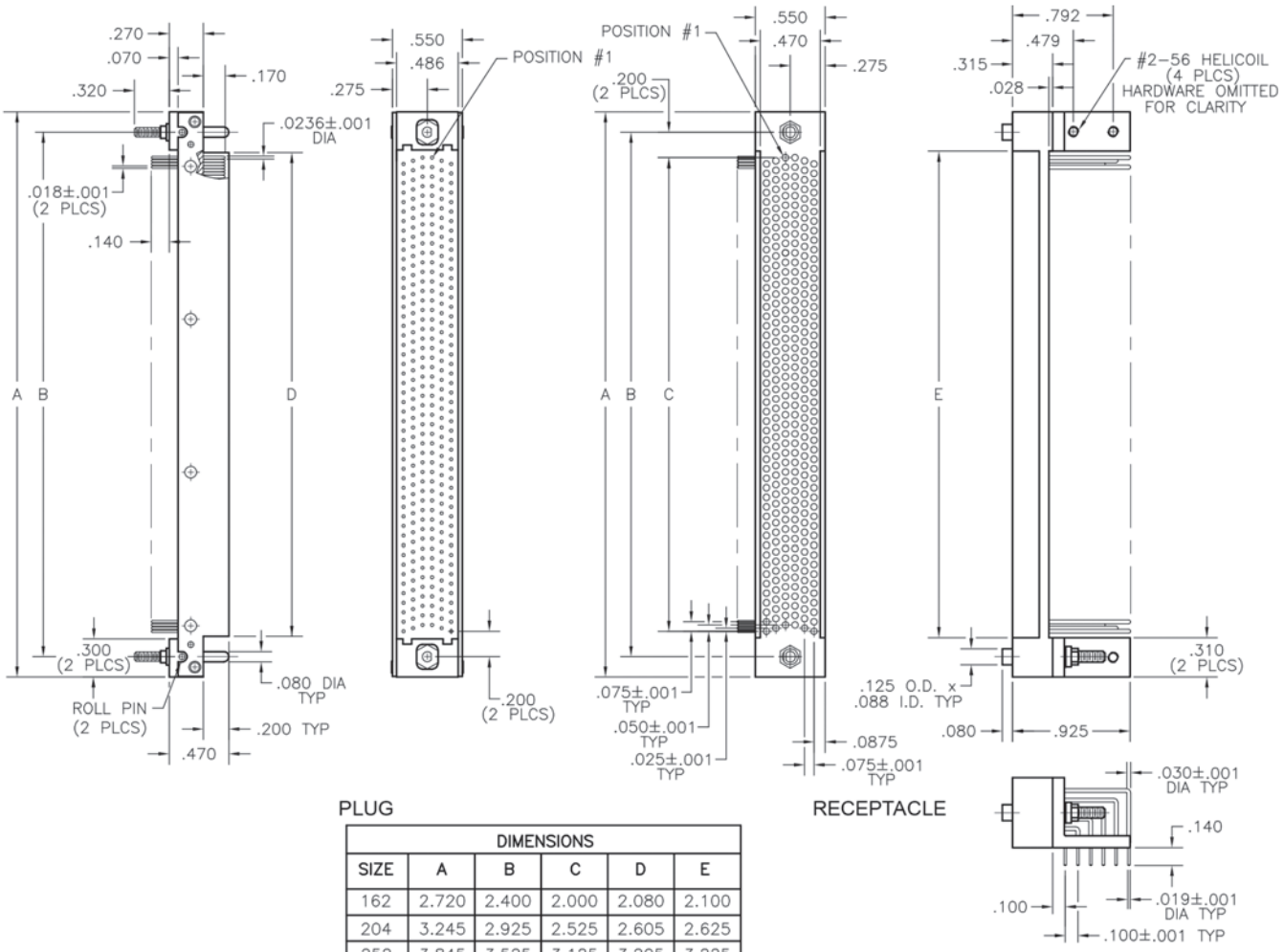


PLUG

RECEPTACLE

| DIMENSIONS | | | | | |
|---|---|---|---|---|---|
| SIZE | A | B | C | D | E |
| 162 | 2.720 | 2.400 | 2.000 | 2.080 | 2.100 |
| 204 | 3.245 | 2.925 | 2.525 | 2.605 | 2.625 |
| 252 | 3.845 | 3.525 | 3.125 | 3.205 | 3.225 |
| 300 | 4.445 | 4.125 | 3.725 | 3.805 | 3.825 |
| 360 | 5.195 | 4.875 | 4.475 | 4.550 | 4.575 |
| 402 | 5.720 | 5.400 | 5.000 | 5.080 | 5.100 |