TWO ROW – CABLE-TO-VERTICAL SMT WITH MOUNTING EARS

NM & NK
0.025" I 9 THROUGH 91 CONTACTS

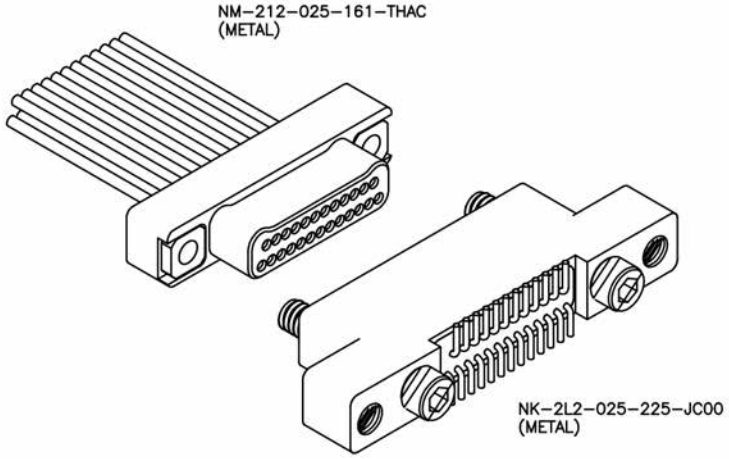

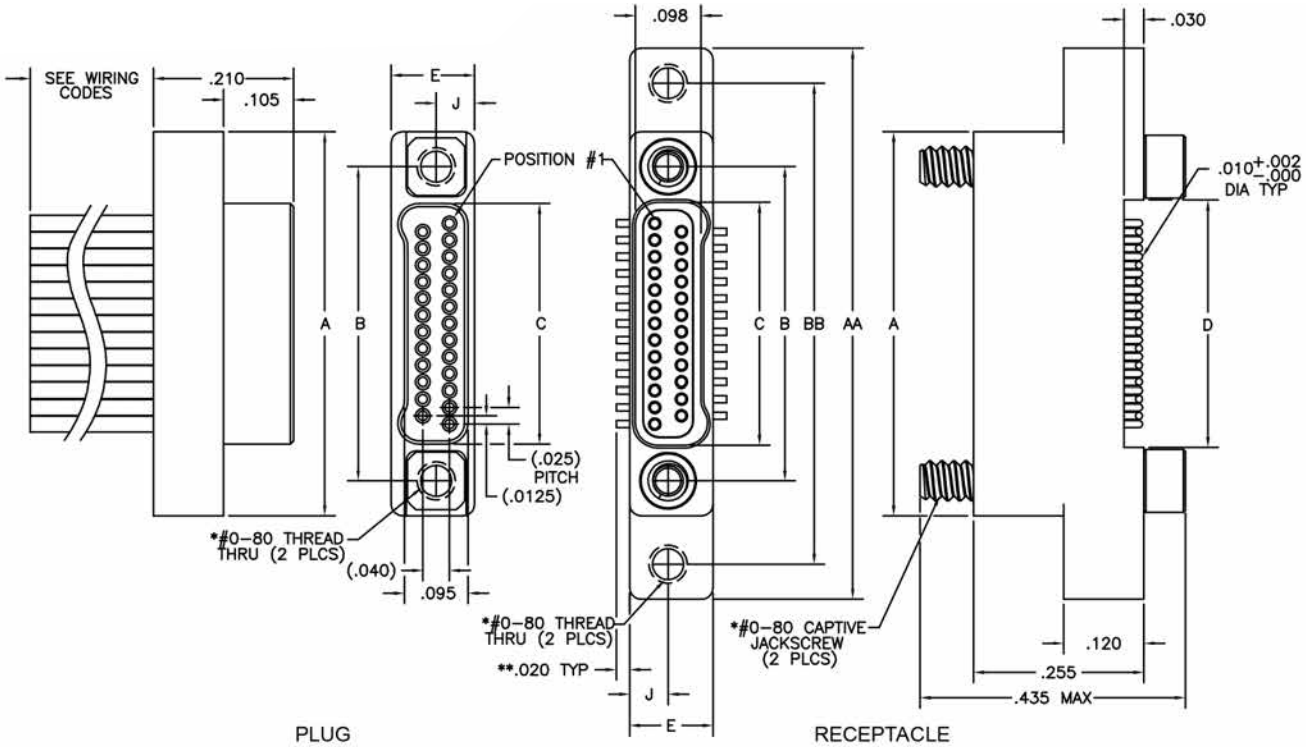

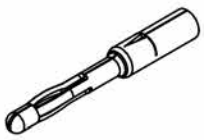

PIN CONTACT
3 TINE SPRING MEMBER, CRIMP

DIMENSIONS										
SIZE	A	B	C PLUG	C RCPT	D	E	J	AA	BB	HARDWARE*
9	.375	.270	.160	.163	.170	.125	.0575	.625	.520	#0–80 THREAD
15	.450	.345	.235	.238	.245			.700	.595	
21	.525	.420	.310	.313	.320			.775	.670	
25	.575	.470	.360	.363	.370			.825	.720	
31	.650	.545	.435	.438	.445			.900	.795	
37	.725	.620	.510	.513	.520			.975	.870	
51	.900	.795	.685	.688	.695			1.150	1.045	
65	1.075	.970	.860	.863	.870			1.325	1.220	
69	1.125	1.020	.910	.913	.920			1.375	1.270	
85	1.377	1.246	1.110	1.113	1.120	.150	.0700	1.679	1.546	#2–56 THREAD
91	1.452	1.321	1.185	1.188	1.195			1.754	1.621	

* = #2–56 UNC THREAD ON 85 POSITION CONNECTORS
** = DIMENSION CHANGES TO .040" FOR "010" OPTION.
SEE PAGE N-55.

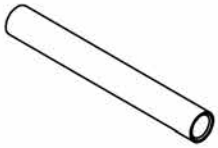

SOCKET CONTACT
DRAWN TUBE, CRIMP