ONE ROW – CABLE-TO-BOARD HORIZONTAL SMT

NM & NK
0.025" I 9 THROUGH 51 CONTACTS

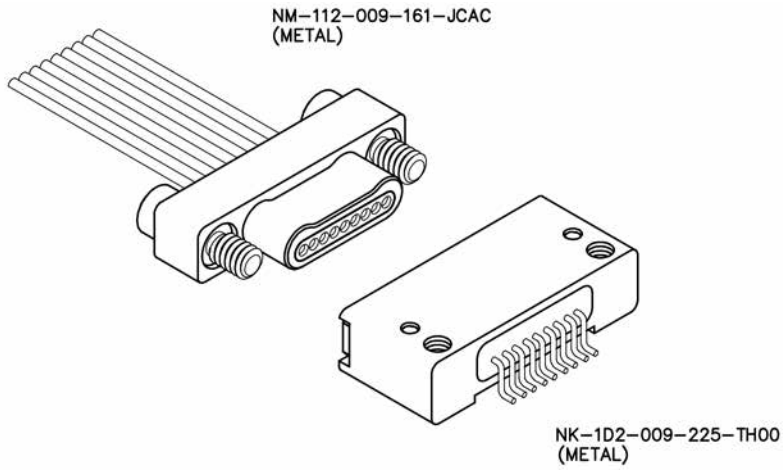

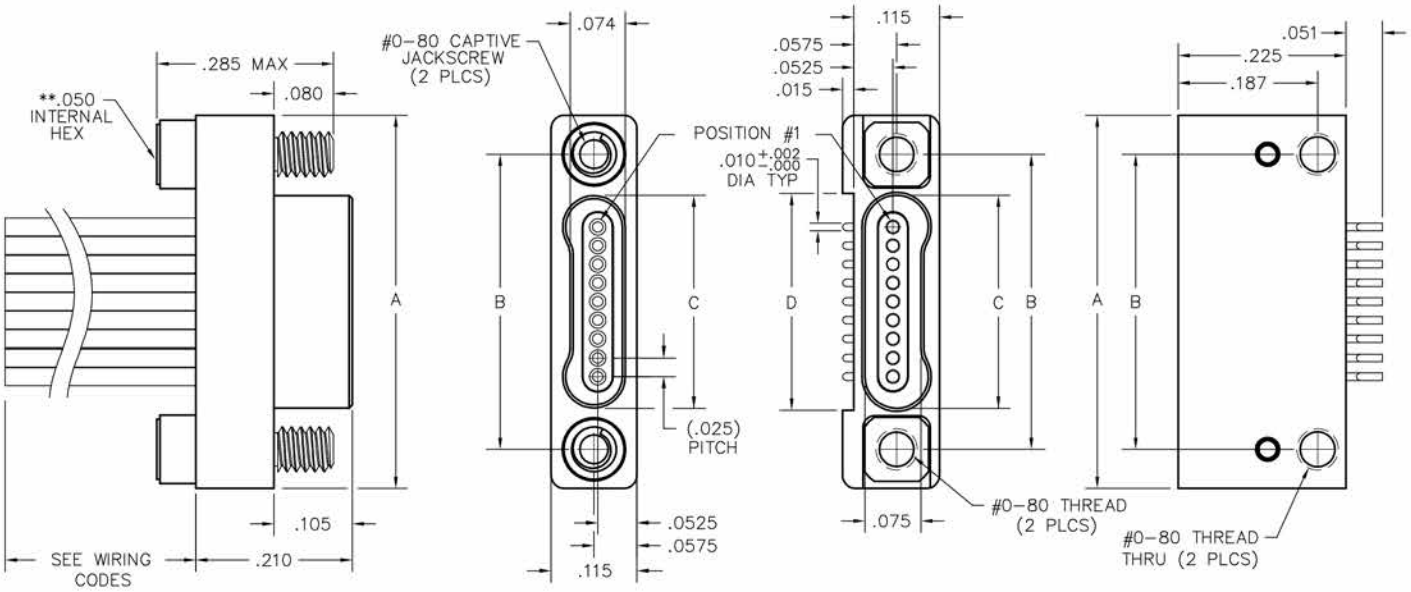

PLUG

RECEPTACLE

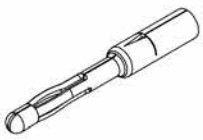

PIN CONTACT
3 TINE SPRING MEMBER, CRIMP

DIMENSIONS					
SIZE	A	B	C		D
			PLUG	RCPT	
9	.500	.395	.284	.285	.290
15	.650	.545	.434	.435	.440
21	.800	.695	.584	.585	.590
25	.900	.795	.684	.685	.690
31	1.050	.945	.834	.835	.840
37	1.200	1.095	.984	.985	.990
51	1.550	1.445	1.334	1.335	1.340

** = HEX MEASUREMENT TAKEN ACROSS THE FLATS.

SOCKET CONTACT
DRAWN TUBE, CRIMP