TWO ROW – FLEX-TO-BOARD

NK & NK
0.025" I 9 THROUGH 91 CONTACTS

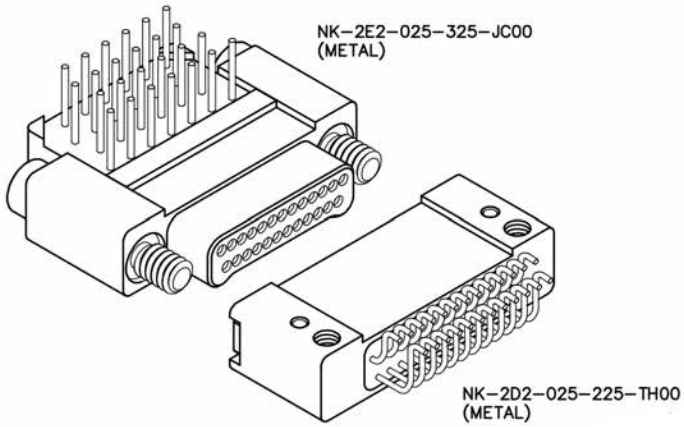

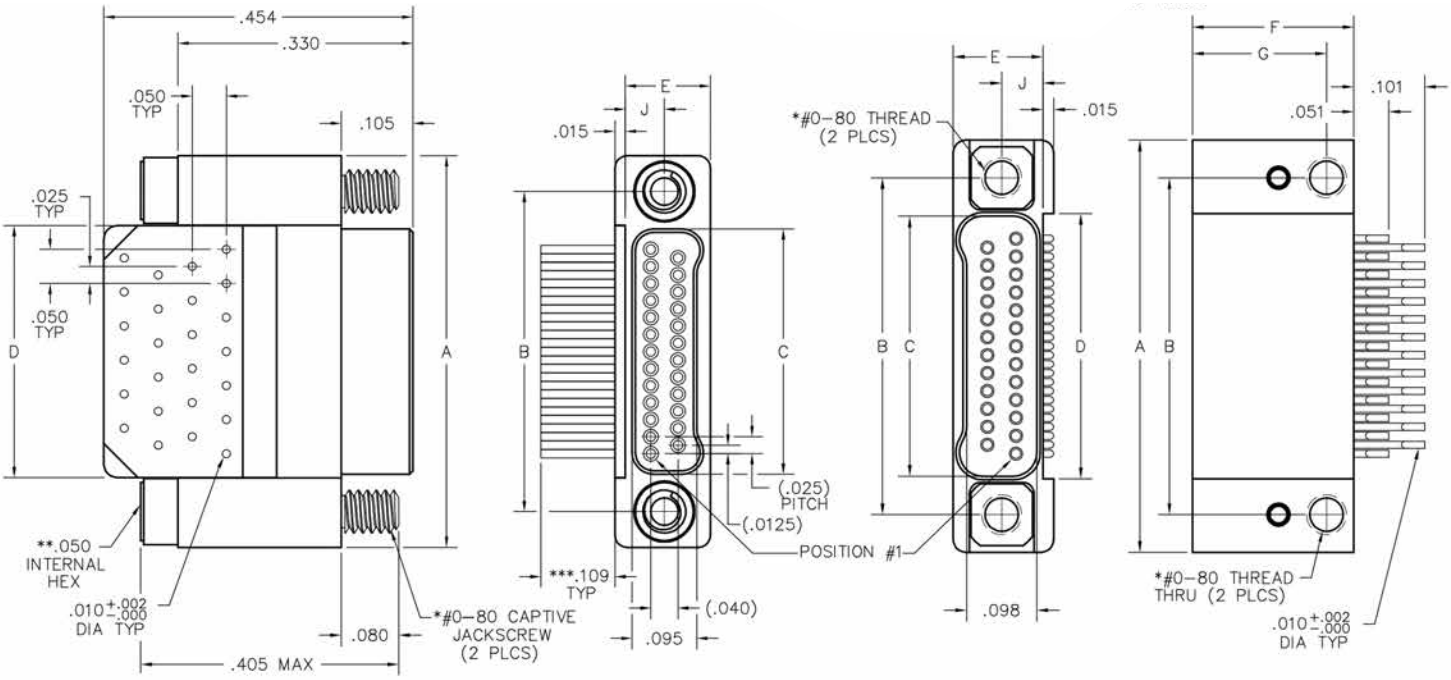

PLUG RECEPTACLE

DIMENSIONS										
SIZE	A	B	C PLUG	C RCPT	D	E	F	G	J	*HARDWARE
9	.375	.270	.160	.163	.170	.125	.225	.187	.0575	#0–80 THREAD
15	.450	.345	.235	.238	.245					
21	.525	.420	.310	.313	.320					
25	.575	.470	.360	.363	.370					
31	.650	.545	.435	.438	.445					
37	.725	.620	.510	.513	.520					
51	.900	.795	.685	.688	.695					
65	1.075	.970	.860	.863	.870					
69	1.125	1.020	.910	.913	.920					
85	1.377	1.246	1.110	1.113	1.120	.150	.270	.210	.0700	#2–56 THREAD
91	1.452	1.321	1.185	1.188	1.195					

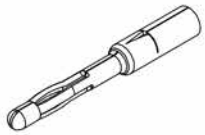

PIN CONTACT
3 TINE SPRING MEMBER, CRIMP

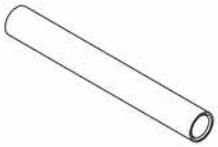

SOCKET CONTACT
DRAWN TUBE, CRIMP

* = #2–56 UNC THREAD ON 85 & 91 POSITION CONNECTORS.
** = 1/16" HEX ON 85 & 91 POSITION CONNECTORS. HEX MEASUREMENT TAKEN ACROSS THE FLATS.
*** = OTHER LENGTHS AS REQUIRED