TWO ROW – CABLE-TO-BOARD VERTICAL SMT

NM & NK
0.025" I 9 THROUGH 91 CONTACTS

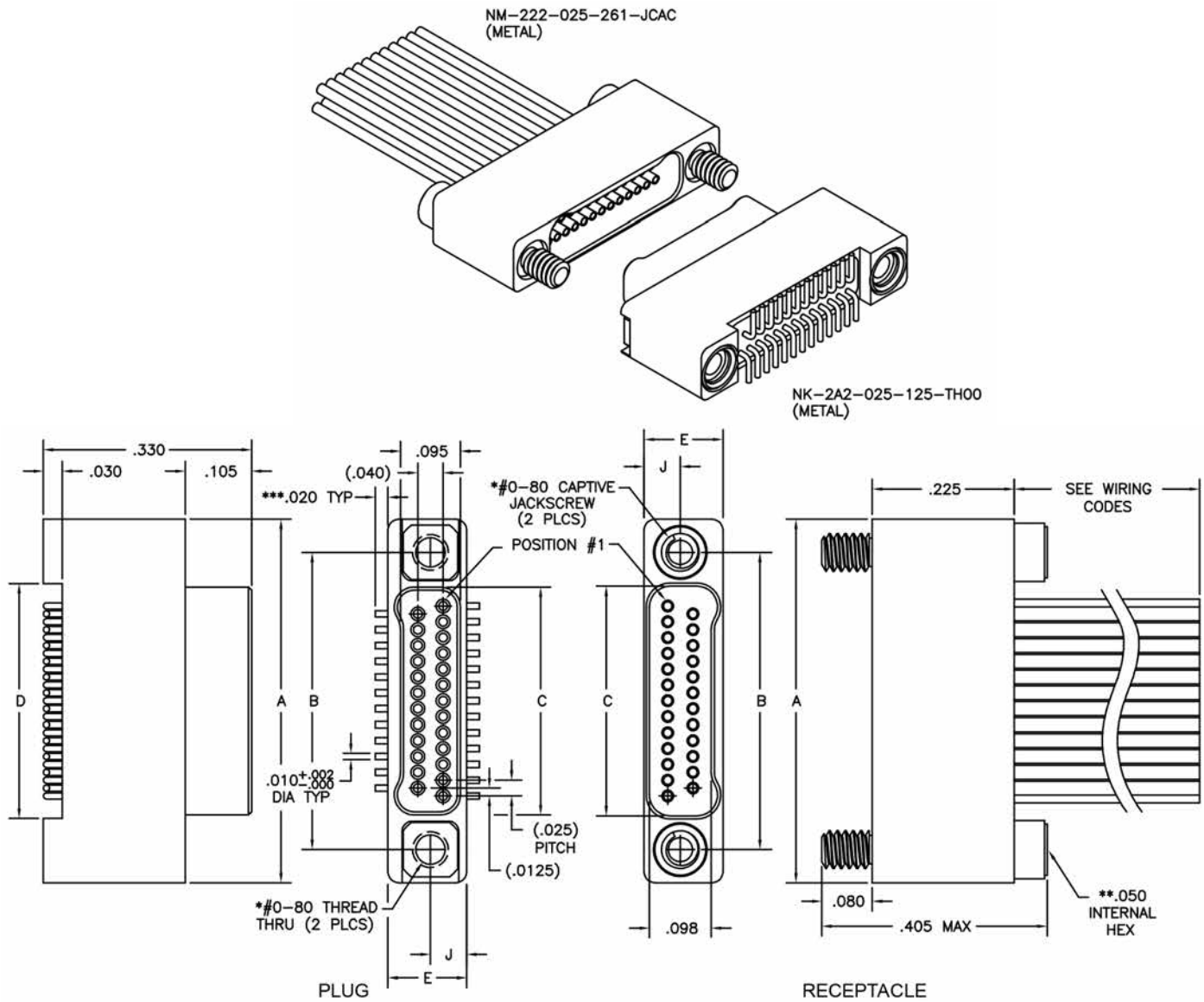

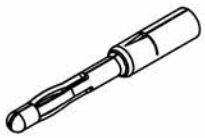

PIN CONTACT
3 TINE SPRING MEMBER, CRIMP

DIMENSIONS								
SIZE	A	B	C		D	E	J	*HARDWARE
			PLUG	RCPT				
9	.375	.270	.160	.163	.170	.125	.0575	#0–80 THREAD
15	.450	.345	.235	.238	.245			
21	.525	.420	.310	.313	.320			
25	.575	.470	.360	.363	.370			
31	.650	.545	.435	.438	.445			
37	.725	.620	.510	.513	.520			
51	.900	.795	.685	.688	.695			
65	1.075	.970	.860	.863	.870			
69	1.125	1.020	.910	.913	.920			
85	1.377	1.246	1.110	1.113	1.120	.150	.0700	#2–56 THREAD
91	1.452	1.321	1.185	1.188	1.195			

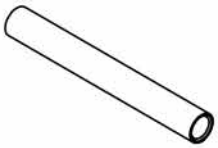

SOCKET CONTACT
DRAWN TUBE, CRIMP

* = #2–56 UNC THREAD ON 85 AND 91 POSITION CONNECTORS.
** = 1/16" HEX ON 85 POSITION CONNECTORS. HEX MEASUREMENT TAKEN ACROSS THE FLATS.
*** = DIMENSION CHANGES TO .040" FOR "010" OPTION.
SEE PAGE N-49.