RUGGED METAL SOLDER CUP (INTEGRAL SHIELD TERMINATION)

MM
0.050" I 9 THROUGH 100 CONTACTS

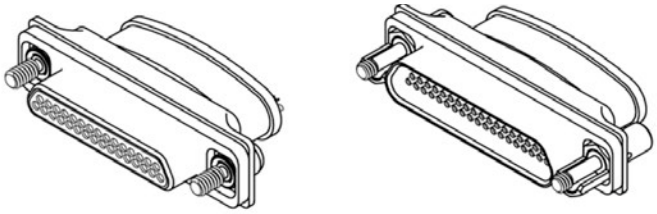

MM-2P2-031-113-4500
(PLUG)

MM-2Q2-031-213-KS44
(RECEPTACLE)

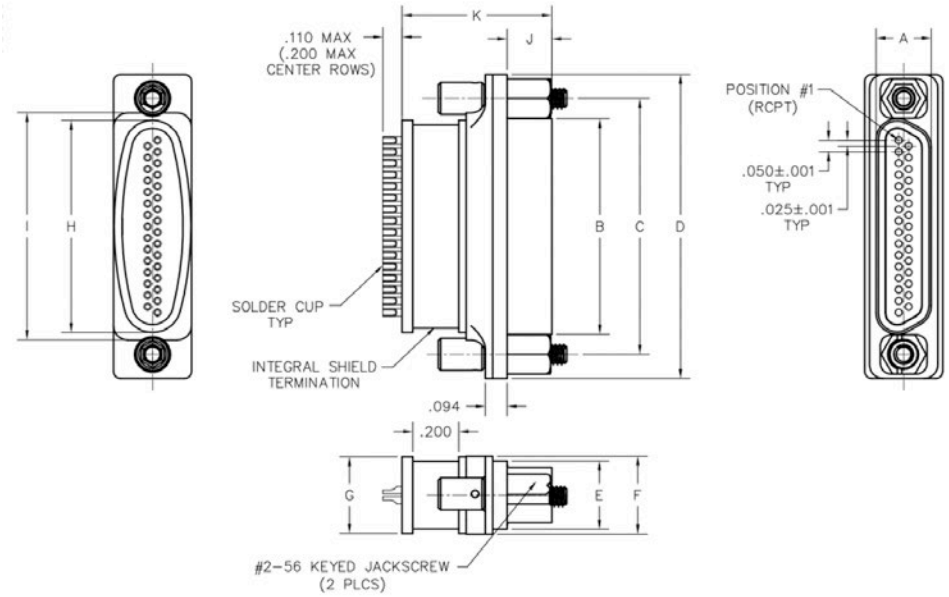

DIMENSIONS																	
Size	Contact Row	A		B		C	Hardware	D	E	F	G	H	I	J		K	
		Plug MAX	RCPT MAX	Plug MAX	RCPT MAX									Plug	RCPT	Plug	RCPT
9	2	0.185	0.251	0.334	0.400	0.565	#2-56 UNC THD (0.092 DIA THROUGH)	0.775	0.298	0.340	0.335	0.375	0.440	0.183	0.195	0.640	0.652
15				0.484	0.550	0.715		0.925				0.525	0.590				
21				0.634	0.700	0.865		1.075				0.675	0.740				
25				0.734	0.800	0.965		1.175				0.775	0.840				
31				0.884	0.950	1.115		1.325				0.925	0.990				
37				1.034	1.100	1.265		1.475				1.075	1.140				
51				1.384	1.450	1.615		1.825				1.425	1.490				
51	3	0.228	0.294	0.984	1.050	1.215		1.425	0.341	0.380	0.367	1.025	1.090				
69				1.284	1.350	1.515		1.725				1.325	1.390				
100	4	0.271	0.394	1.384	1.508	1.800	#4-40 UNC THD (0.147 DIA THROUGH)	2.160	0.381	0.430	0.417	1.457	1.522				