BOARD-TO-CABLE (STANDARD FOOTPRINT)

MK & ML – RUGGED BOARD MOUNT &
MM & MN – RUGGED CABLE
0.050" I 9 THROUGH 100 CONTACTS

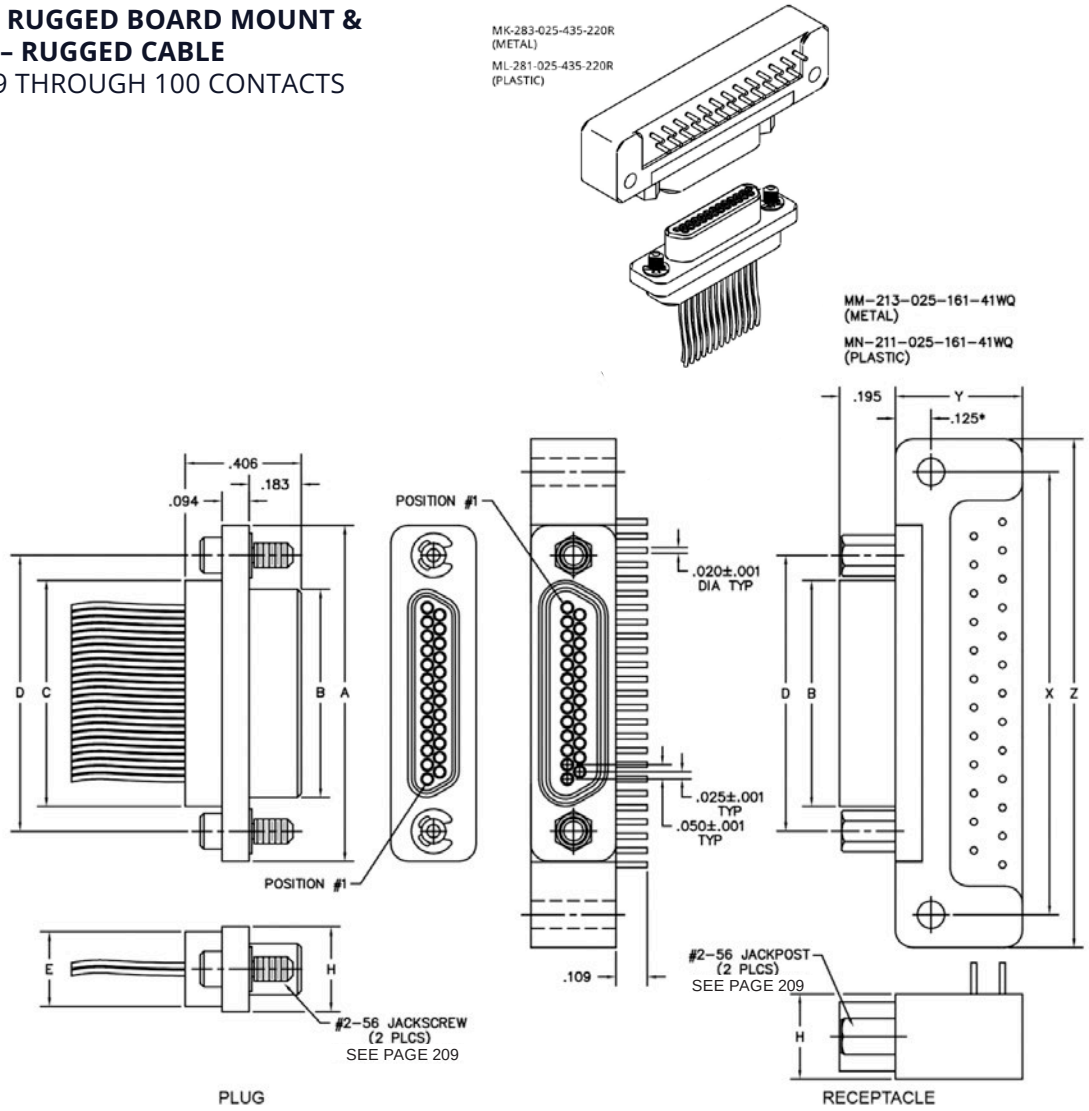

DIMENSIONS													
Size	Contact Row	A	B		C	D	E Potting Well Max	H	X	Y MAX	Z MAX	Hardware	Mounting Hole
			Plug MAX	RCPT MAX									
9	2	0.775	0.334	0.400	0.390	0.565	0.270	0.298	1.150	0.455	1.390	#2-56 UNC THD	0.096 DIA or #2-56 UNC Threaded Insert
15		0.925	0.484	0.550	0.540	0.715			1.300		1.540		
21		1.075	0.634	0.700	0.690	0.865			1.450		1.690		
25		1.175	0.734	0.800	0.790	0.965			1.550		1.790		
31		1.325	0.884	0.950	0.940	1.115			1.800		2.040		
37		1.475	1.034	1.100	1.090	1.265			2.100		2.340		
51	3	1.425	0.984	1.050	1.040	1.215	0.310	0.341	1.600	0.565	1.875		
100	4	2.160	1.384	1.508	1.432	1.800	0.360	0.384	2.500	0.665**	2.780	#4-40 UNC THD	0.125 DIA or #4-40 UNC Threaded

*0.225 For "-05k" and "OBJ" special codes (MIL-SPEC footprint for 100 position only)
** 0.765 Max for "-05k" and "OBJ" special codes (MIL-SPEC footprint for 100 position only)