SIX ROW – STRAIGHT SMT PLUG

RM6 – RECOMMENDED BOARD LAYOUT

0.075" I 448 THROUGH 604 CONTACTS

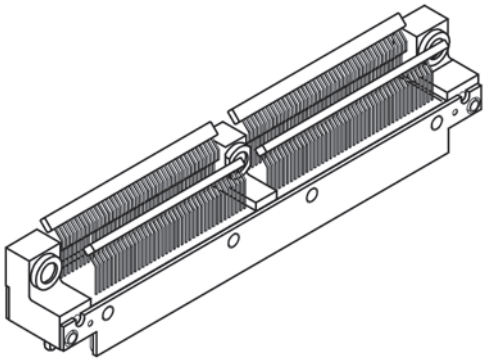

DIMENSIONS			
SIZE	A	B	C
448	6.250	5.850	2.775
604	8.200	7.800	3.750

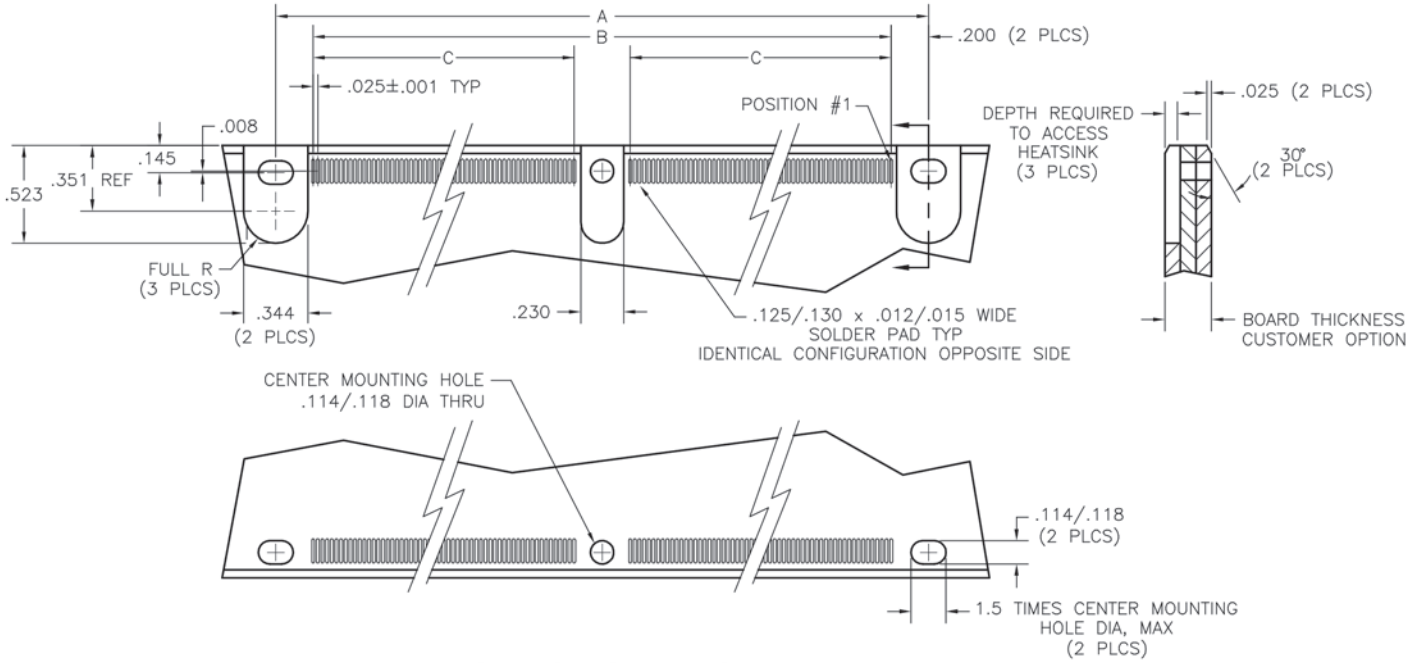

SURFACE MOUNT PLUG

SIZE	CONTACT ID	SIZE	CONTACT ID
448	C448 C447 C446 C445 C444 ____ C341 C340 C339 C338 C337 C336 C335 C334 C333 C332 ____ C229 C228 C227 C226 C225 C224 C223 C222 C221 C220 ____ C117 C116 C115 C114 C113 C112 C111 C110 C109 C108 ____ C5 C4 C3 C2 C1	604	C604 C603 C602 C601 C600 ____ C458 C457 C456 C455 C454 C453 C452 C451 C450 C449 ____ C307 C306 C305 C304 C303 C302 C301 C300 C299 C298 ____ C156 C155 C154 C153 C152 C151 C150 C149 C148 C147 ____ C5 C4 C3 C2 C1